FLIR Duo R™

RADIOMETRIC THERMAL AND VISIBLE IMAGING IN A COMPACT PACKAGE

The new FLIR® Duo™ R is the world's first compact, lightweight, radiometric thermal and visible light imager designed for professional drone applications. The same size and shape as the most popular action cameras, Duo R offers all of the same features as the FLIR Duo – like on-board recording, and real-time remote control of camera functions over PWM – but embeds accurate, calibrated temperature measurements in every pixel of the thermal image for remote, non-contact temperature measurements from your aerial platform.

Featuring the cutting edge Lepton thermal sensor, Duo R pairs 160x120 thermal resolution with a 2-megapixel color and low-light camera. Operators can switch between them in flight, select MSX® blended imagery, or view a picture-in-picture mode, and record everything to a microSD card.

Duo R has a wide 5-26 VDC input power range, making integration to onboard systems easy. It also gives you two live video output options: analog video over the 10-pin mini-USB connector, or digital video over micro-HDMI.

No matter how you look at it, Duo R gives you incredible capabilities in a small package and at an affordable price.

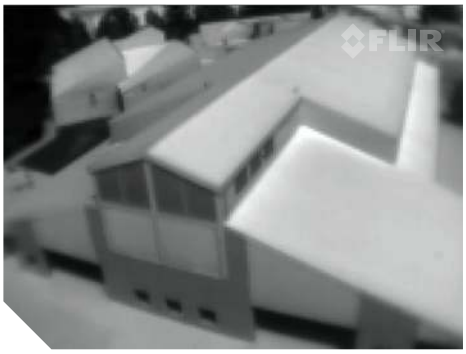

Aerial Thermal Roof Inspection

MSX adds extra detail to thermal images.

THERMAL AND VISIBLE-LIGHT IMAGING AND RECORDING IN A POPULAR ACTION CAMERA FORM FACTOR

- Fully radiometric thermal images plus thermal video and recording
- Simple power-in/video-out interface over 10-pin mini-USB connector
- Switch between thermal, visible, MSX, or PIP imagery in real time

ON-BOARD RECORDING OF THERMAL AND VISIBLE IMAGERY TO A CONVENIENT ON-BOARD MICROSD CARD

- Record real-time thermal videos with H.264 compression in MOV format
- MSX image enhancement for greater image detail in daylight conditions
- MAVLink integration with MAVLink-compatible flight controllers

FLEXIBLE, POWERFUL CAMERA CONTROL AND CONFIGURATION OPTIONS

- Control camera functions with PWM inputs – imagery color palettes, recording start/stop, still image capture, or video streaming switch (thermal, visible, MSX, PIP)
- Configure your camera's recording and control settings over Bluetooth with our mobile app
- Field-upgradeability make sure you'll always have the latest features

Specifications

Overview	FLIR Duo R
Thermal Imager	Uncooled VOx Microbolometer
Sensor Resolution	160 × 120
Lens	57° × 44°
Spectral Band	7.5 – 13.5 µm
Thermal Frame Rates	7.5 Hz (NTSC); 8.3 Hz (PAL)
Thermal Measurement Accuracy	+/-5°C
Visible Camera Resolution	1920 × 1080
Visible Camera FOV	90°
Physical Attributes	
Size	41 × 59 × 29.6 mm
Weight	84 grams
Image Processing & Display Controls	
Image Optimization for sUAS?	Yes
Multiple Color Palettes?	Yes – Adjustable in App and via PWM
MSX Enhancement?	Yes
Picture-in-Picture?	Yes
Interfacing	
Mini-USB Connector	Power in, Analog video out, PWM connections, MAVLink control
Input Voltage	5.0 - 26.0 VDC
Power Dissipation (Peak)	2.2 W (3.3 W)
Remote Control	Two PWM Controls (assigned in App)
MAVLink interface?	Yes
Digital Video Output	Micro-HDMI; HDMI video at 1080p
Storage Media	Micro-SD card
Environmental	
Operating Temperature Range	0°C to +50°C
Storage Temperature Range	-20°C to +60°C
Operational Altitude	+12,000 feet

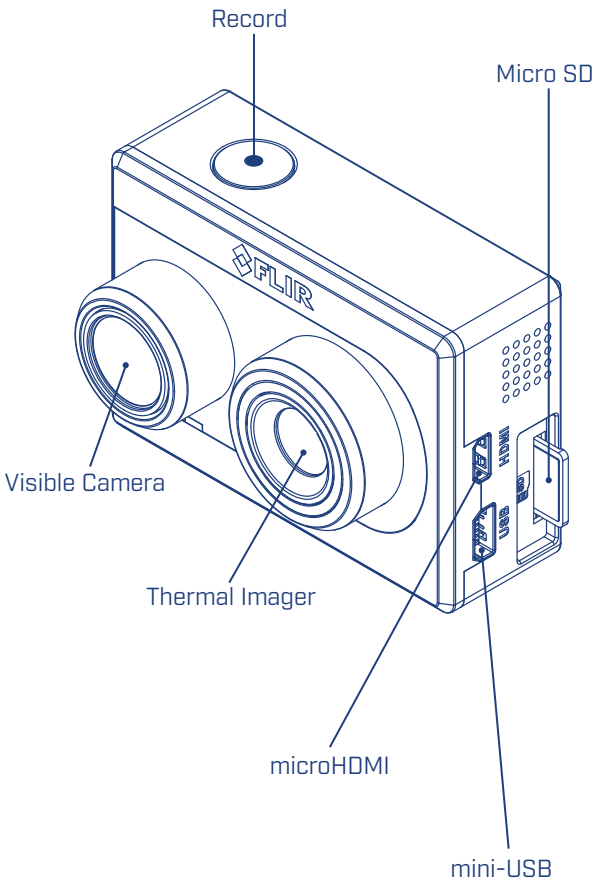

SANTA BARBARA
FLIR Systems, Inc.
6769 Hollister Ave.
Goleta, CA 93117
USA
PH: +1 805.964.9797

PORTLAND
Corporate Headquarters
FLIR Systems, Inc.
27700 SW Parkway Ave.
Wilsonville, OR 97070
USA
PH: +1 866.477.3687

BELGIUM
FLIR Systems
Luxemburgstraat 2
2321 Meer
Belgium
PH: +32 (0) 3665 5100

CHINA – SHANGHAI
FLIR Systems, Co., Ltd.
K301-302, No.26 Lane
168, Daduhe Road,
Putuo District, Shanghai
200062,P.R.China
PH: +86-21-5169 7628

www.flir.com/duoR
NASDAQ: FLIR

Equipment described herein is subject to US export regulations and may require a license prior to export. Diversion contrary to US law is prohibited. Imagery for illustration purposes only. Specifications are subject to change without notice. ©2017 FLIR Systems, Inc. All rights reserved. 16-1759